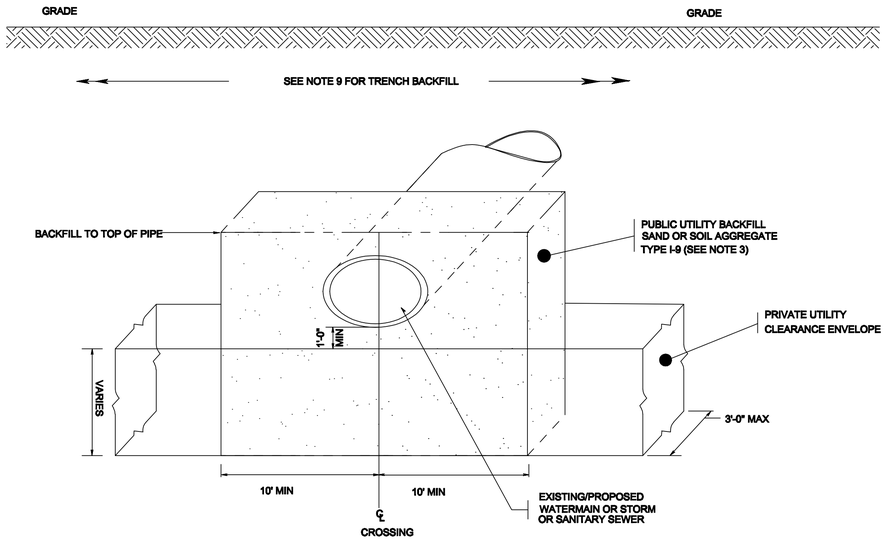

BACKFILL AT THE CROSSING OF SEWER & WATER MAIN

(PRIVATE UTILITY BELOW PUBLIC UTILITY)
(N.T.S.)

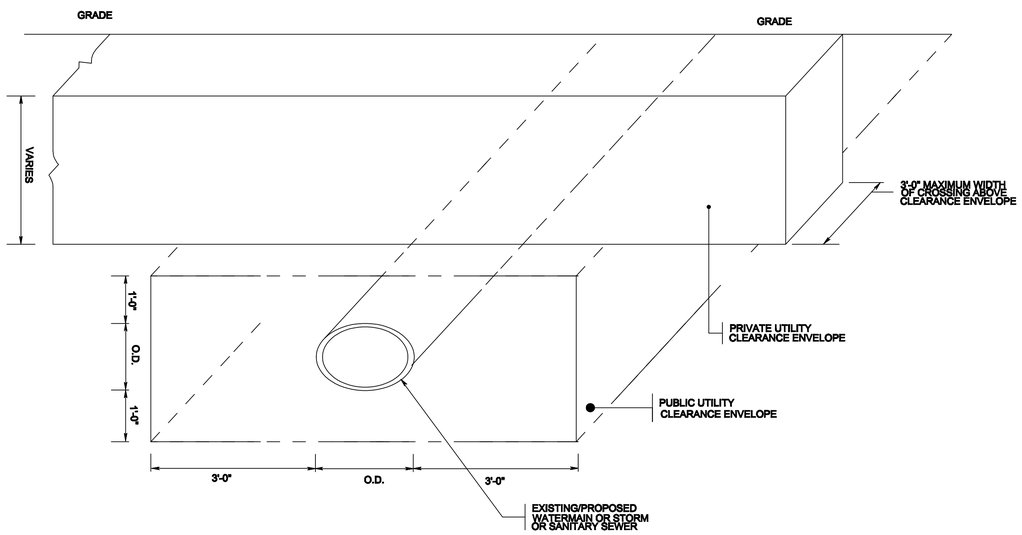

UTILITY CLEARANCE ENVELOPES

(PRIVATE UTILITY ABOVE PUBLIC UTILITY)
(N.T.S.)

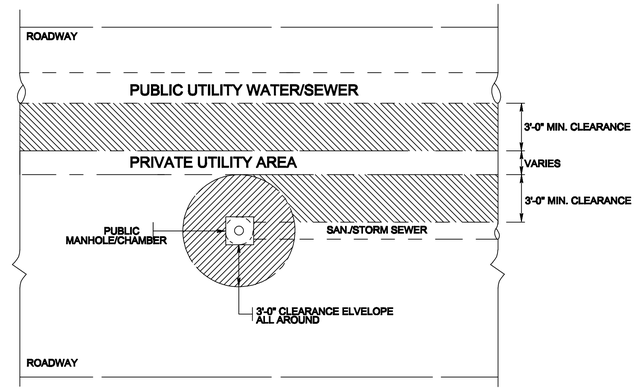

UTILITY CLEARANCES

(N.T.S.)

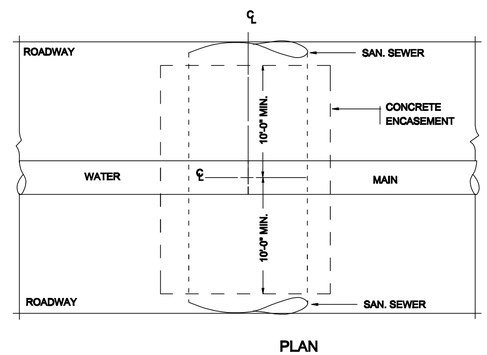

PLAN

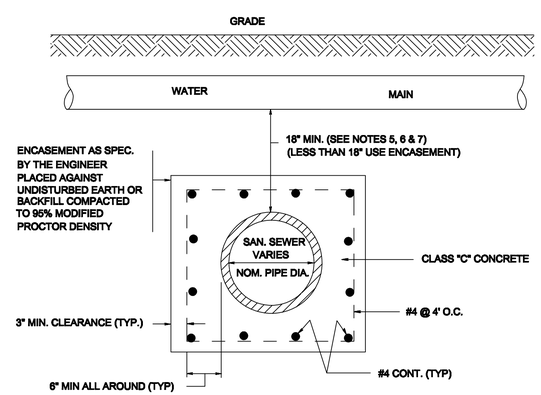

ENCASEMENT DETAIL

(N.T.S.)

NOTES FOR UTILITY CLEARANCE & ENCASEMENT DETAILS

1) NO UTILITIES SHALL BE CONSTRUCTED WITHIN THE CLEARANCE ENVELOPE SHOWN IF AT ALL PRACTICAL.

2) WHERE CONDITIONS REQUIRE VIOLATION OF THE CLEARANCE ENVELOPE, ALIGNMENT AND DETAILS OF UTILITY CONSTRUCTION SHALL BE SUBMITTED TO AND APPROVED BY THE ENGINEER.

3)WHERE UTILITIES CROSS BETWEEN EXISTING/PROPOSED WATERMAINS OR STORM AND SANITARY SEWERS THE UTILITY CONTRACTOR SHALL PROVIDE ADEQUATE STRUCTURAL SUPPORT BY INSTALLING SELECT BACKFILL FROM THE UTILITY TO THE TOP OF WATERMAIN OR SEWER. SELECT BACKFILL SHALL BE CLEAN SAND OR NJDOT SOIL AGGREGATE TYPE I-9 COMPACTED TO 95% OF MODIFIED PROCTOR DENSITY ASTMD698 METHOD D. IT SHALL EXTEND A MIN. OF 10 FEET EACH WAY FROM THE CENTERLINE OF THE CROSSING.

4) THE ABOVE CRITERIA SHALL APPLY TO ALL PRIVATE AND PUBLIC UTILITY CONTRACTORS. HOWEVER, THE CLEARANCES MAY NOT NECESSARILY APPLY TO SEWER CONSTRUCTION. SEE PROFILES FOR ACTUAL VERTICAL CLEARANCE.

5) IN ADDITION TO THE UTILITY CLEARANCE ENVELOPE SHOWN, THE FOLLOWING ADDITIONAL REQUIREMENTS SHALL APPLY TO WATERMAIN CLEARANCES:

A) ALL WATER MAINS SHALL CLEAR SANITARY SEWERS BY A MIN. VERTICAL CLEARANCE OF 18 IN. IF AT ALL PRACTICAL.

B) WHERE 18 IN. VERTICAL CLEARANCE CANNOT BE OBTAINED THE SANITARY SEWER SHALL BE CONSTRUCTED OF CLASS 53 DUCTILE IRON PIPE CONFORMING TO ANSI 21.51 AND LINED IN ACCORD WITH ANSI 21.4. JOITNS SHALL BE SEALED WITH GASKETS IN CONFORMANCE WITH ANSI A21.11. THE SEWER ALONE SHALL BE PRESSURE TESTED AT 200 PSI PER AWWA C600. IN ADDITION, THE LOWER OF THE TWO PIPES SHALL BE CASED IN A CONCRETE ENVELOPE FOR A MIN. OF 10 FT. EACH WAY FROM THE CENTERLINE OF THE CROSSING. SELECT BACKFILL SPECIFIED IN NOTE UC-3 ABOVE SHALL ALSO APPLY.

6) ADEQUATE STRUCTURAL SUPPORT OF SEWERS AND THE WATER LINES AT ALL POINTS OF CROSSING SHALL BE PROVIDED TO PREVENT EXCESSIVE DEFLECTION, SETTLEMENT OR DAMAGE. THE CROSSING SHALL BE ARRANGED SUCH THAT THE JOINTS IN THE PIPES ARE EQUIDISTANT AND AS FAR AS POSSIBLE FROM THE OTHER PIPE.

7) UNDER LARGE CONCENTRATED LOADS, TIMBER SHEETING IN TRENCH (IF ANY) SHALL BE CUT & LEFT IN PLACE.

8) PRIVATE UTILITY CO. SHALL PROVIDE PLANS FOR APPROVAL AT THE TIME OF APPLICATION FOR STREET OPENING. THE PLANS SHALL SHOW PROPOSED UTILITIES AND CLEARANCES FOR VARIOUS CROSSINGS OF SEWER AND WATER MAINS.

9) THE REMAINING TRENCH BACKFILL AND RESTORATION OF THE ROADWAY AND SIDEWALK PAVEMENT SHALL BE IN CONFORMANCE WITH JERSEY CITY STANDARDS, (SEE SHEETS 2,6, & 7).

COPYRIGHT 2008, T&M ASSOCIATES – ALL RIGHTS RESERVED
THE COPYING OR REUSE OF THIS DOCUMENT, OR PORTIONS THEREOF, FOR OTHER THAN THE ORIGINAL PROJECT OR THE PURPOSE ORIGINALLY INTENDED, WITHOUT THE WRITTEN PERMISSION OF T&M ASSOCIATES, IS PROHIBITED.

City of Jersey City
Division of Engineering
575 ROUTE 440
JERSEY CITY, NEW JERSEY 07305
(201) 547-4412

NO.	REVISIONS	DATE

CITY OF JERSEY CITY
STANDARDS

NO.	REVISIONS	DATE

William R. Goble, P.E.
Director
Division of Engineering
NJ P.E. Lic. No. 24798

Date

Utility Clearances & Encasements

DRAWN BY	DESIGNED BY	CHECKED BY
PROJECT NO.	CADD FILE	SCALE

DRAWING

SHEET 17 / 17